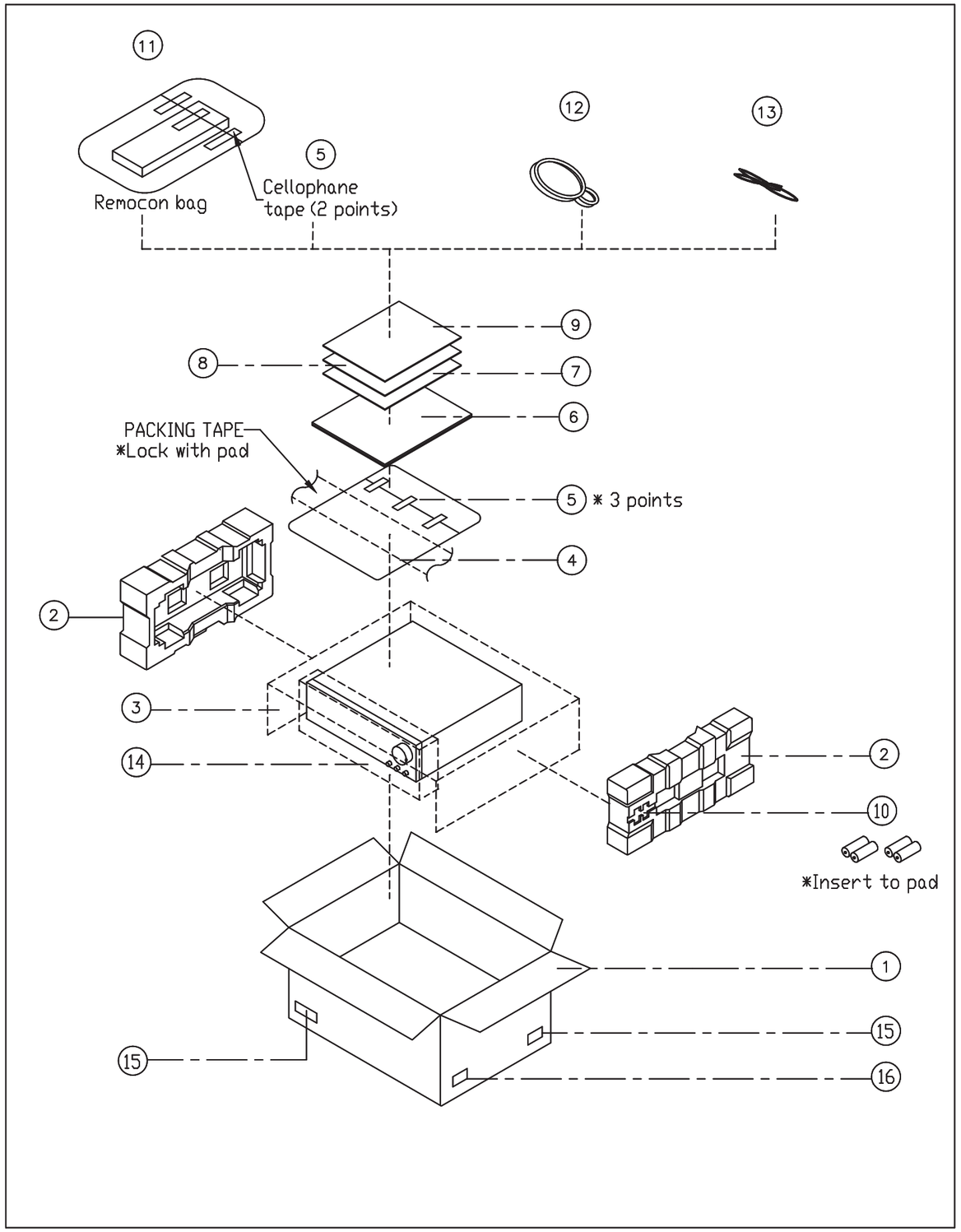

*PACKING PARTS LIST

NO.	PARTS NAME	PARTS NO.	MATERIAL	Q'TY	MODEL NO.
1	MASTER CARTON	6121-004-010	DW-1, BROWN	1	AVR 35USA
		6121-007-001	DW-1, BROWN	1	AVR 35RDS
		6121-010-001	DW-1, BROWN	1	AVR 35SG
2	PAD. SIDE	6151-003-010	PS-FM50, EPS	2	
3	SHEET. POLY	6132-003-010	PE-FOAM	1	
4	BAG. POLY	6131-003-010	PE T 0.05	1	
5	TAPE. CELLOPHANE	9931-001-020		10cm	
6	INSTRUCTION MANUAL	6311-004-010	PAPER	1	AVR 35USA
		6311-007-010	PAPER	1	AVR 35RDS
		6311-010-010	PAPER	1	AVR 35SG
7	CARD. WARRANTY	6331-003-010	PAPER	1	AVR 35USA
		6331-003-010	PAPER	0	AVR 35RDS
		6331-003-010	PAPER	0	AVR 35SG
8	CARD. POST	6331-003-030	PAPER	1	AVR 35USA
		6331-003-030	PAPER	0	AVR 35RDS
		6331-003-030	PAPER	0	AVR 35SG
9	CARD. SAFETY GUARD	6331-003-020	PAPER	1	AVR 35USA
		6331-003-020	PAPER	0	AVR 35RDS
		6331-003-020	PAPER	0	AVR 35SG
10	BATTERY. ASS'Y	6453-001-002	AAA	2	
11	REMOCON ASS'Y	J0192045000X		1	AVR 35USA
		A0191-045-001		1	AVR 35RDS
		A0191-085-001		1	AVR 35SG
12	AM LOOP ANTENNA	6457-000-012		1	
13	ANT. FM	6457-000-011		1	
14	COVER. POLY	6132-003-020	PE-FOAM	1	
15	LABEL. BARCODE	6234-004-030	PAPER	4	AVR 35USA
		6234-007-020	PAPER	4	AVR 35RDS
		6234-010-020	PAPER	4	AVR 35SG
16	LABEL. ORIGIN	6234-003-100	PAPER	1	